ON30 CLIMAX LOCO ASSEMBLY

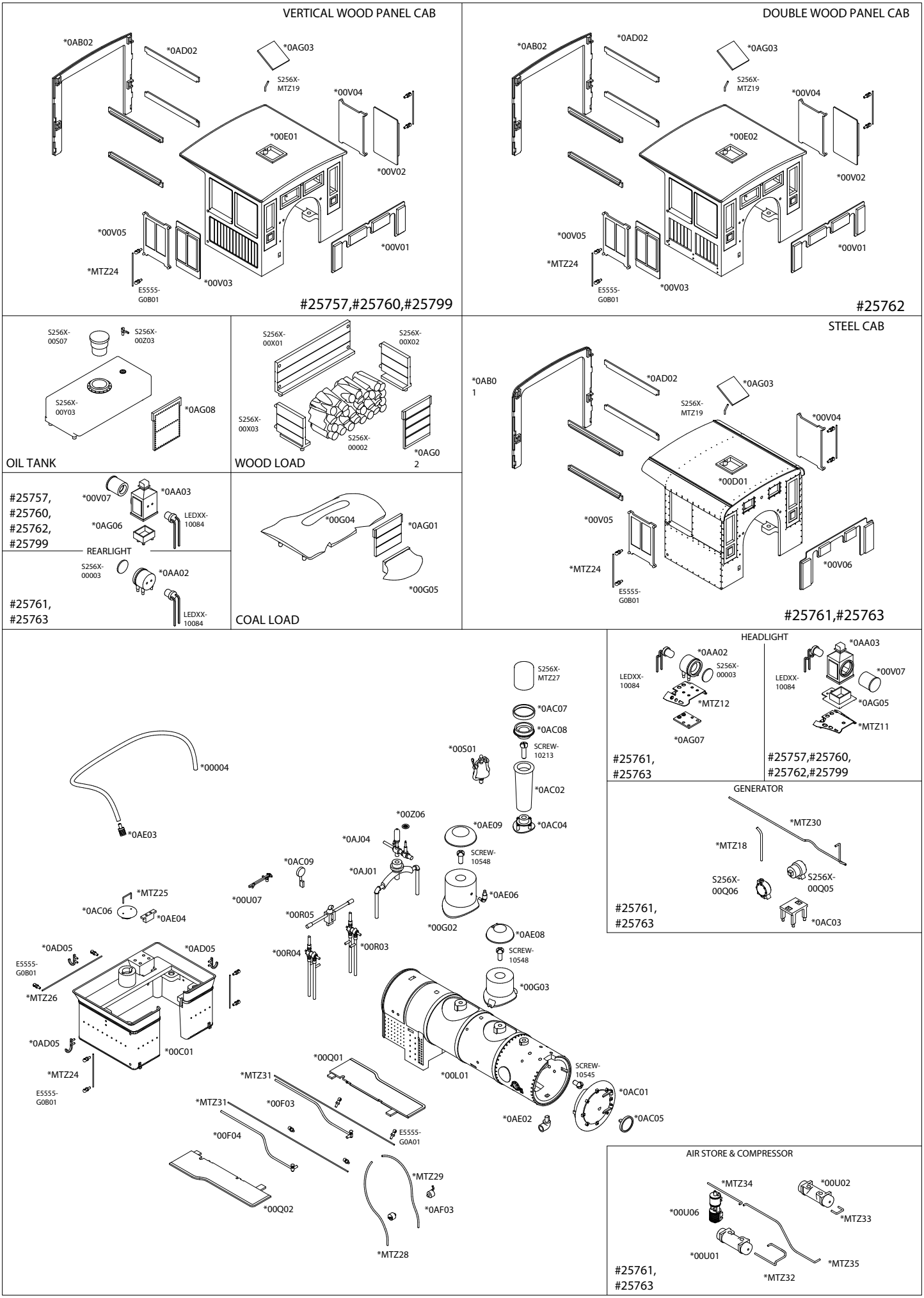

ON30 CLIMAX CHASSIS ASSEMBLY

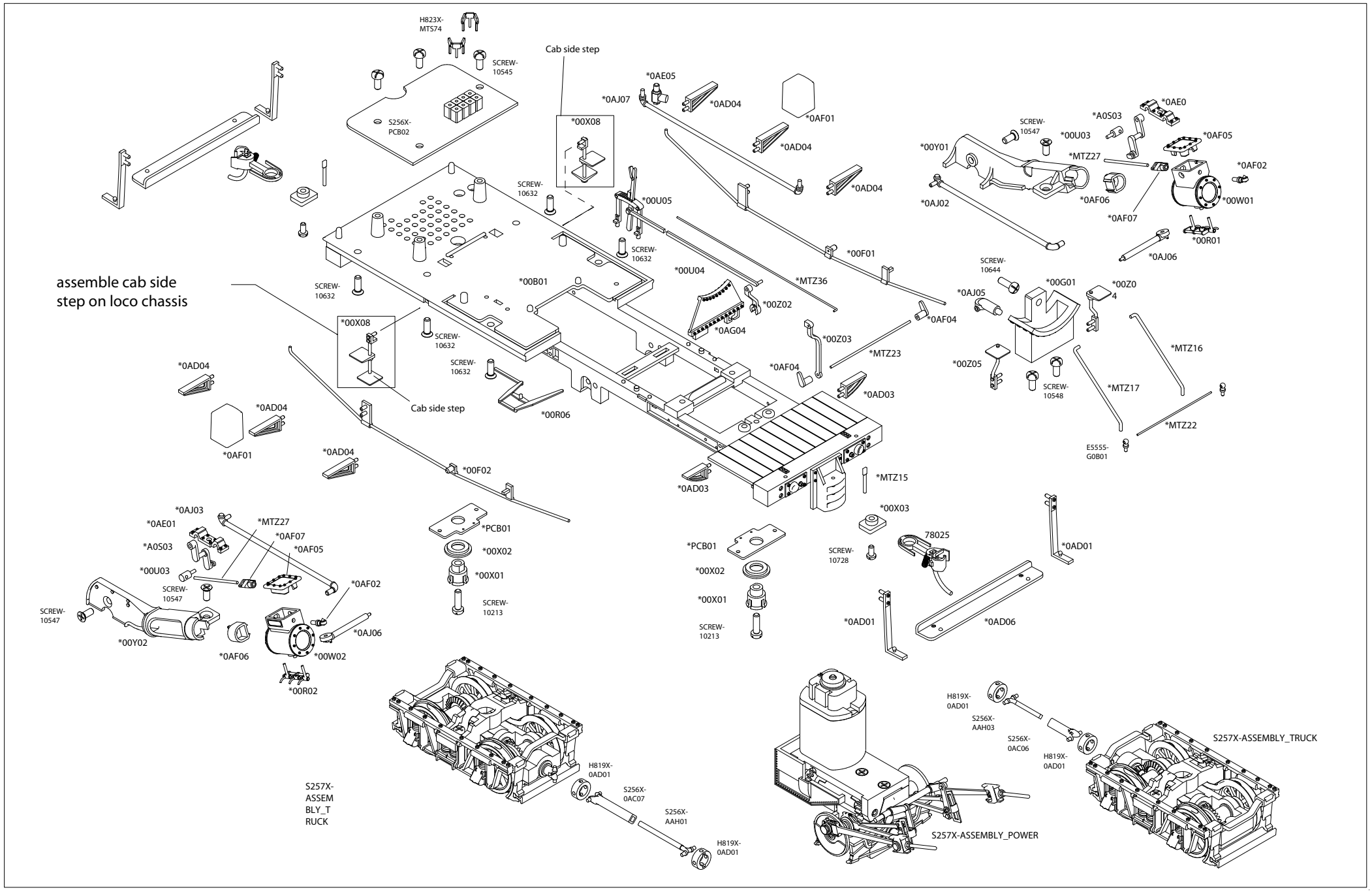

ON30 CLIMAX GEARBOX ASSEMBLY

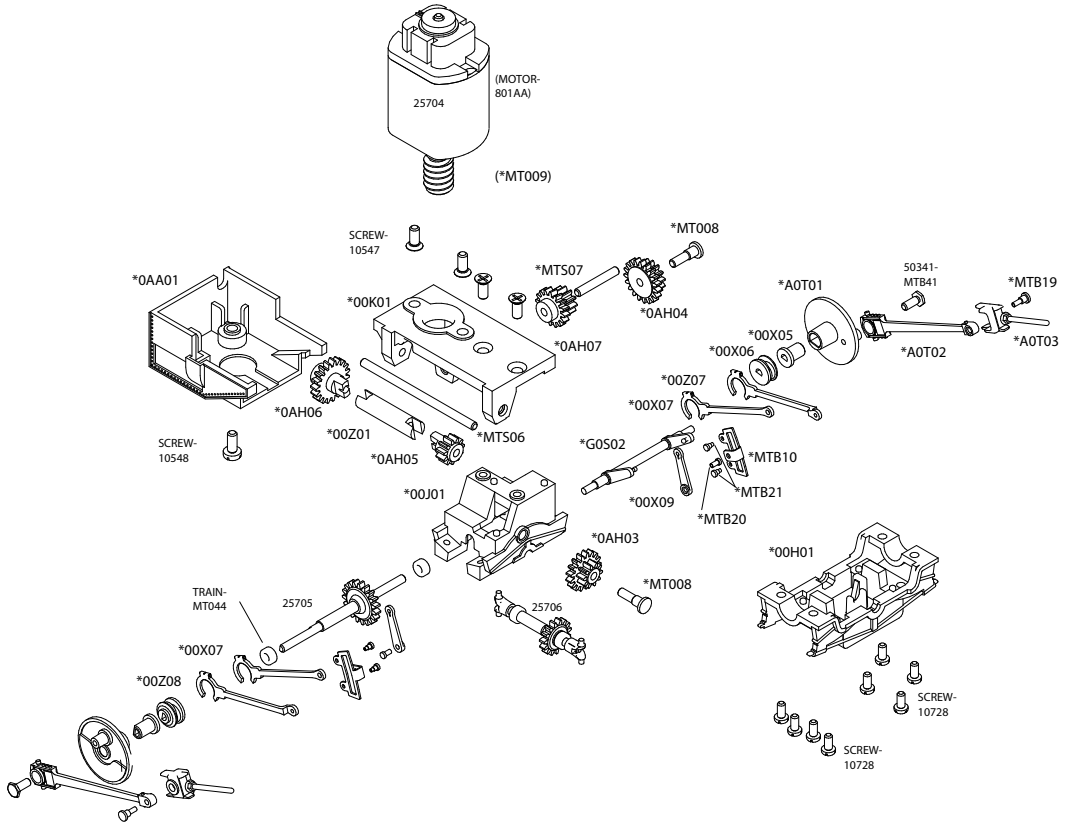

ON30 CLIMAX TRUCK ASSEMBLY

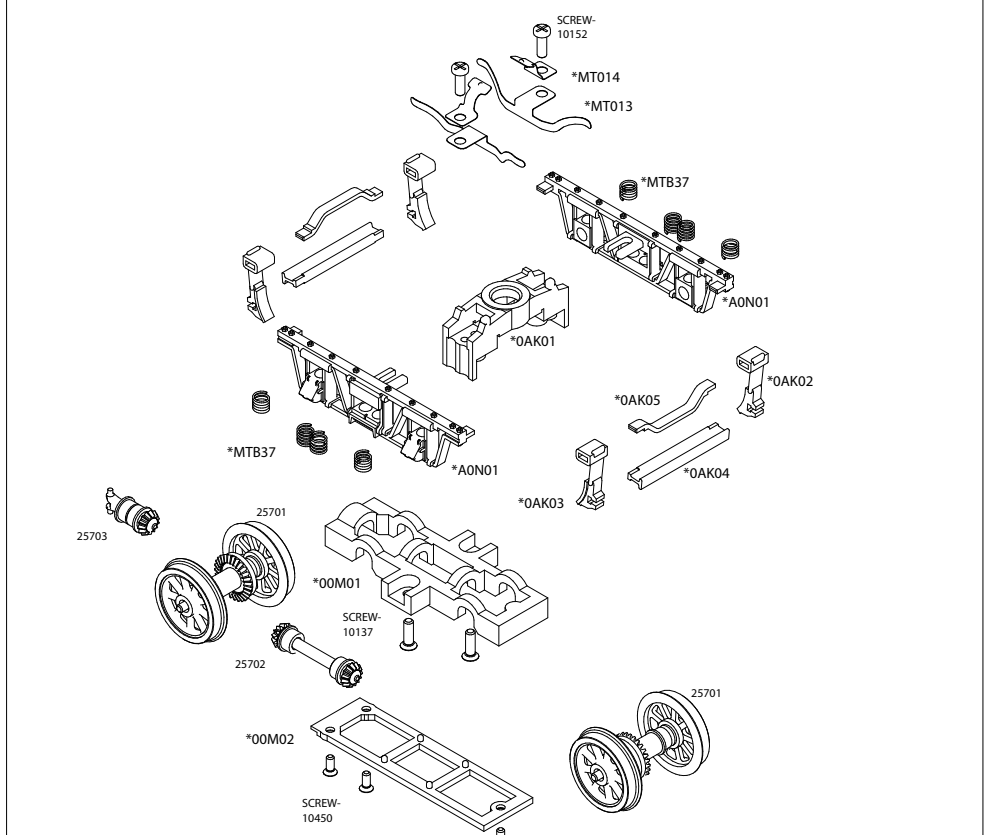

ON30 CLIMAX DCC OPERATION INSTRUCTION

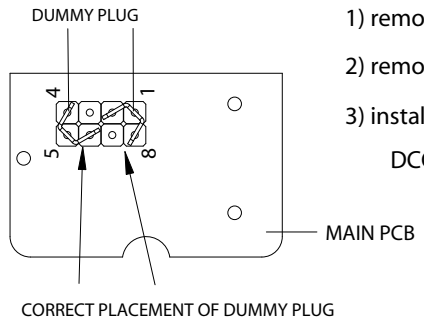

1) remove the coal load or wood load or oil tank,

2) remove two dummy plugs from main PCB,

3) install the DCC compatible decoder for DCC operation .

ACCESSORY PARTS INSTRUCTION

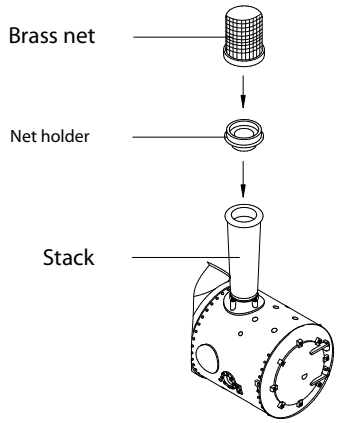

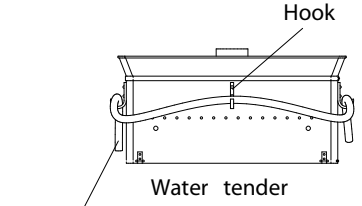

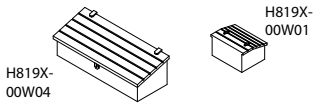

optional tool box