Sierra Steam Sound Install for DC operation with sound for Bachmann's K27 Large Scale Steam Locomotive

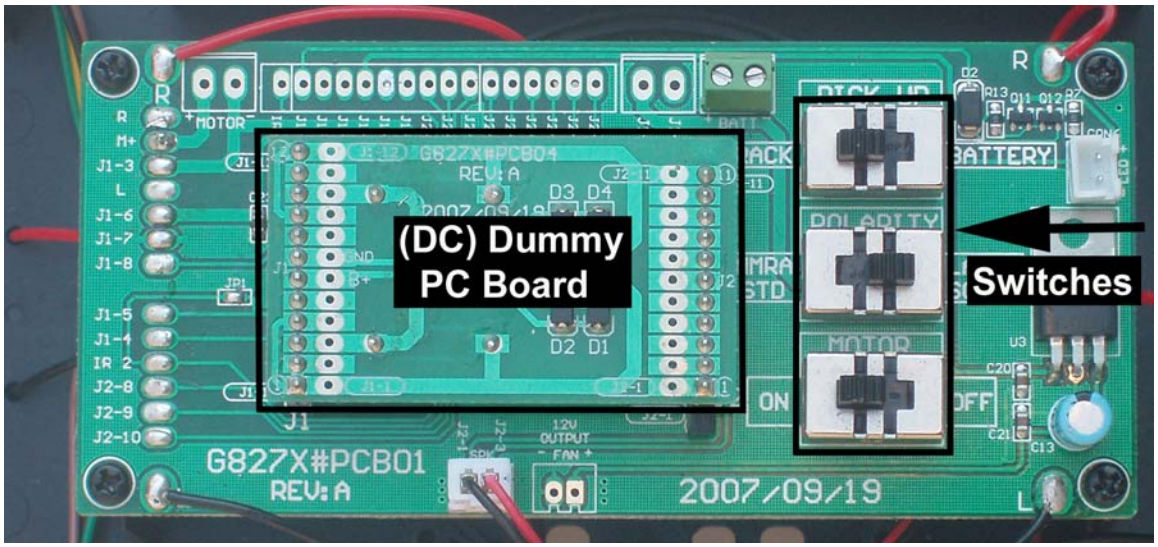

Soundtraxx manufacturers a variety of sound systems for DC and DCC operation in Large Scale.

The following installation instructions are provided to gain the full benefits of the socket in the K27 when used with the Soundtraxx Sierra sound board in DC mode.

The first step is to install a speaker. The tender is designed to have a large 3 inch speaker installed under the main circuit board. Removing the 4 screws holding the board and moving it to one side provides easy access to the speaker area. Remove the 4 speaker placement screws, place the speaker in the space provided and reinstall the speaker holding screws. Next solder the 2 wire speaker cable that was provided with your locomotive to the speaker, reinstall the screws on the main board and plug the speaker cable into its socket on the main PC board.

If the Sierra sound board is to be used in conjunction with a DCC decoder or RC control replace the (DC) Dummy PC Board with a plug and play decoder motor decoder of choice and install the Dallee sound board wires to the solder pads on the side of the main PC board in the tender.

The following describes a DC install for the Sierra sound board in the K-27 using the (DC) Dummy PC Board. Either the solder pads on the engineers' side of the tender or the (DC) Dummy PC Board can be used to attach after market electronics. The (DC) Dummy PC Board is being used for this install since it allows the modeler to perform the installation at the workbench.

The first step is to remove the (DC) Dummy PC Board from the tender. All of the following connection points refer to the solder connections on the (DC) Dummy PC Board

1. Connect K27 J1:1 Pin to Sierra pin #7
2. Connect K27 J1:12 pin to Sierra pin #8
3. Connect K27 J2:1 pin to Sierra pin #9
4. Connect K27 J2:3 pin to Sierra pin #10

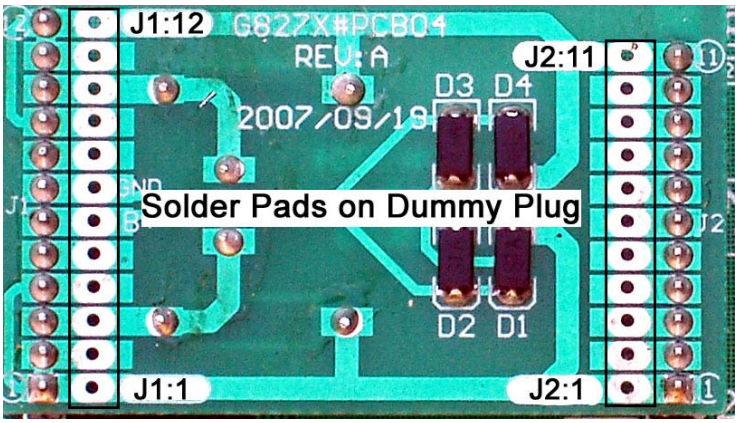

With this installation you should choose the Sierra Auto-Exhaust. (See Sierra Setup Step 1 – Synchronization Source to set this mode)

In this mode the headlights will be directional and the switches behind the smokebox door should be set to DC to turn them on. If you desire that the fireman Fred operation be synchronized with the brightness of the firebox flicker then connect K27 J2:10 Pin to

Sierra pin #6 and place the FF switch behind the cab door to DCC. If you wish that the Classification lights are on when the sound is on then Connect K27 J2:9 Pin to Sierra pin #5 and configure Sierra Setup Step 12- Lighting effect 1 to Constant Intensity

Please note that when the Sierra sound board is used for DC operations, the track voltage at slow speeds is insufficient to power the sound board. For best effects in slow speed DC operation, the sierra 6 volt battery should be added to the Sierra sound board as per their instructions.

To control the Bell, Whistle, Hiss or Coupler clank sounds for the Sierra Steam sound board please refer to the instructions that come with your Sierra sound board.

The following additional optional instructions are required to utilize the K27s optical chuff inputs for synchronized chuff.

1) Install a NPN transistor on the removable K27 (DC) Dummy PC Board. Almost any NPN transistor such as a 2N3904, or 2N2222 will work. Radio shack has numerous NPN transistors any of which can be used. Transistors have three pins. One is Base, One is the Collector and the third is the Emitter. Refer to the package your transistor came in to determine which pin is which.
2) Insert the base pin of the transistor to the K27 chuff output (**J1;5**), and the Emitter pin of the transistor in the ground connection (**J1:7**).
3) Solder a wire to Emitter pin **(J1:7)** of the transistor installed in the step above. Connect the other end of the wire to Sierra pin **2**. This step makes the ground common between the locomotive and the sound board.
4) Install a wire between Sierra pin **11** to the collector pin on the transistor as shown in the above photo. It is best to solder the wire to the transistor and protect the connection using heat shrink tubing.

5) Install a .1uF capacitor to the underside of the (DC) Dummy PC Board between **J1:5** and **J1:7** as shown in the photo below. The purpose of this capacitor is to remove any noise from the circuit.
6) Install a 1uF capacitor between Sierra pins **11** and **12**. Make sure you install the – lead to pin **12**. The purpose of this capacitor is to widen the chuff pulse at higher speeds.
7) The default mode is 4 chuffs per revolution, for 2 chuffs per revolution remove the 2/4 chuff solder jumper on the main board.

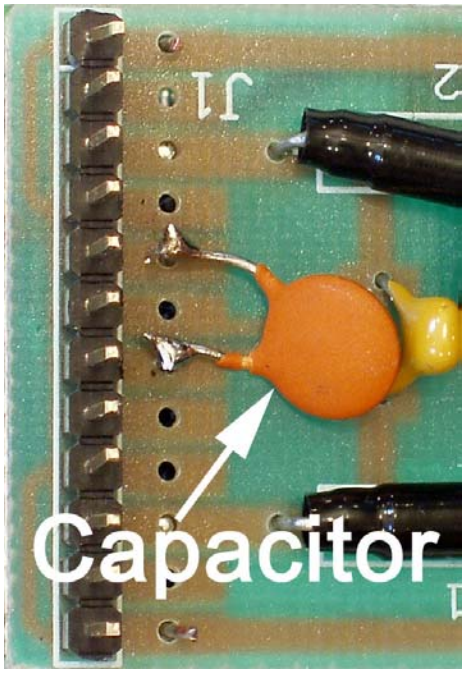

When used for DC operations, the track voltage at slow speeds is insufficient to power the sound board. For best effects in slow speed DC operation, a 9 volt DC battery backup

should be added to the Sierra sound board as per their instructions.

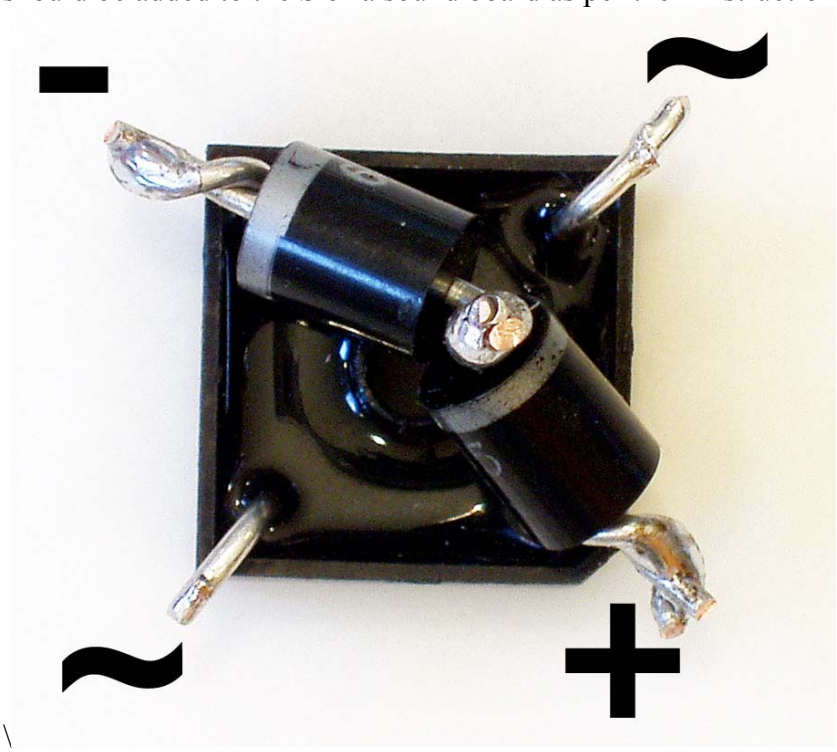

\

The motor and gear train in the K27 is a high efficiency design and will start before there is sufficient voltage to light the headlights and activate the chuff sensors. To ensure the lights and chuff circuits are activated before the motor begins to move, you need to install a 3 diode drop in one motor lead. The easiest way to do this is to use a Rectifier and two Diodes as shown in the photo above. 6 amp or greater components should be used for this. A rectifier has 4 pins. Two are labeled ~, the third is labeled + and the forth is labeled -. Install the two diodes between the + and – leads with the diode band facing the – lead.

Install the rectifier in one motor lead in the K27. The easiest way to do this is to cut the orange motor + wire and connect one end of the wire to each ~ lead as shown in the photo below. The photo also shows the Sierra Steam sound board installed using the dummy socket.

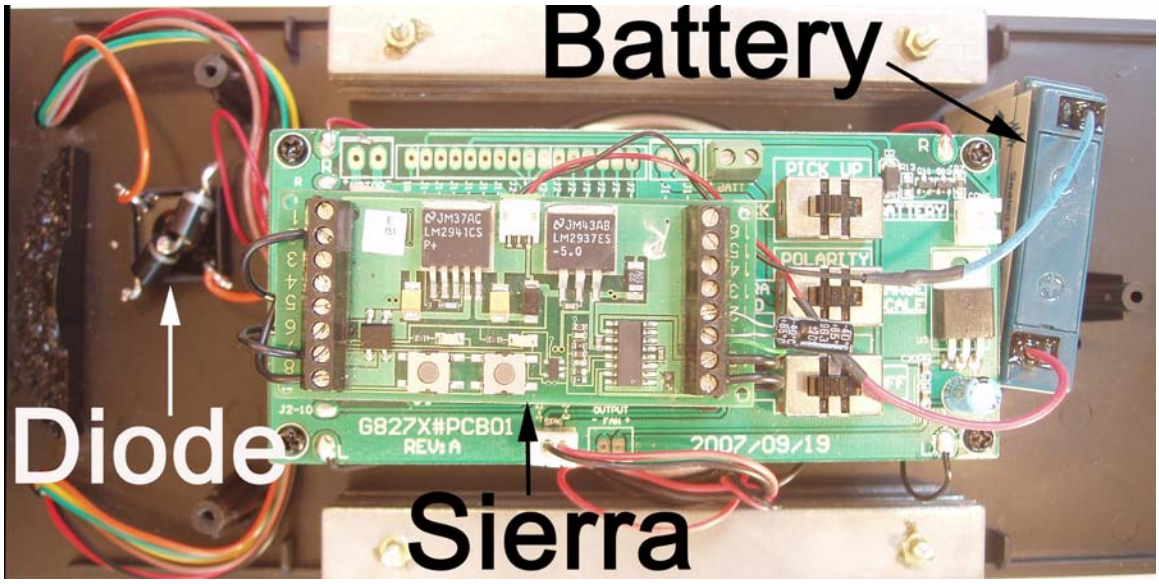

For more information on the Sierra or other Soundtraxx products please contact:

Soundtraxx
210 Rock Point Road
Durango, CO 81301
Phone: (970) 259-0690
Fax: (970) 259-0691
www.soundtraxx.com
email: Sales@soundtraxx.com